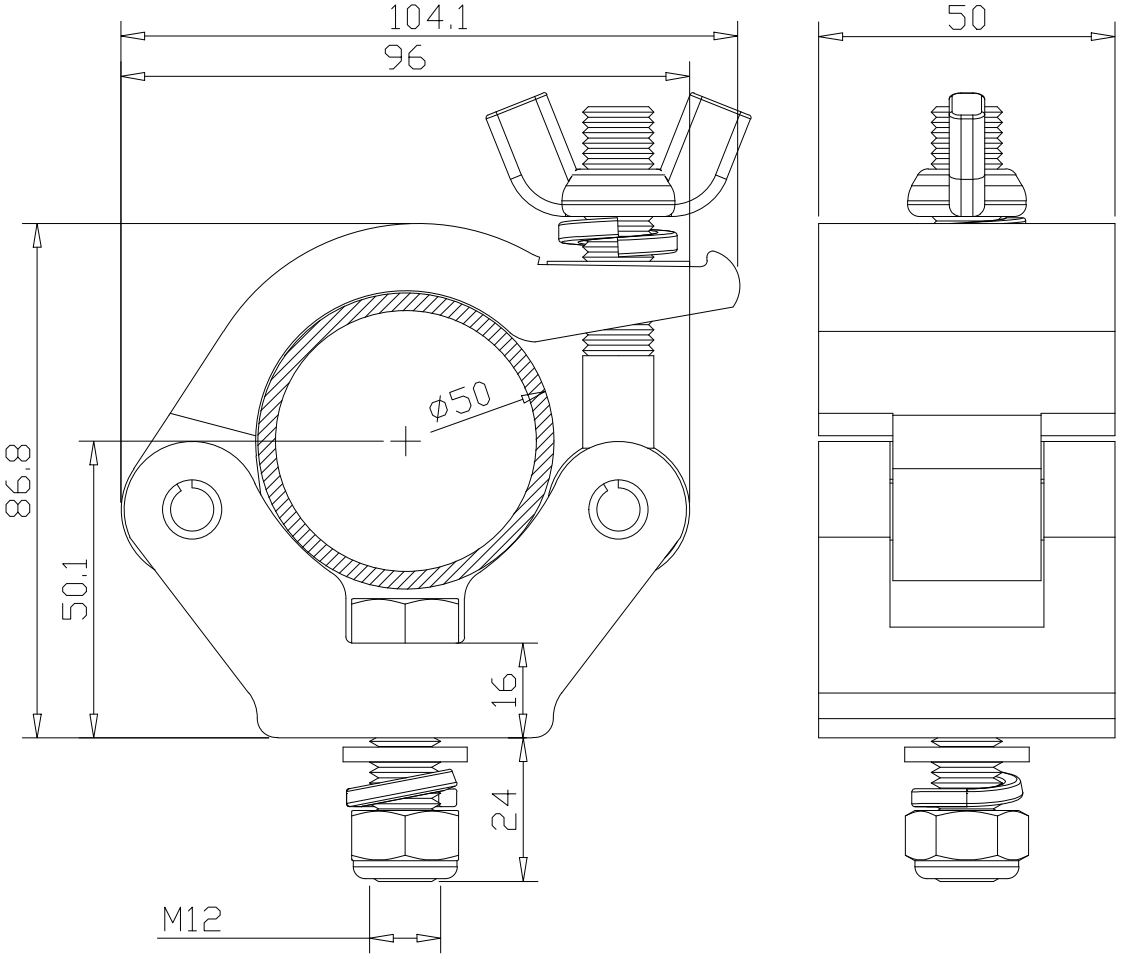
104.1
96
50
86.8
50.1
ϕ50
16
24
M12