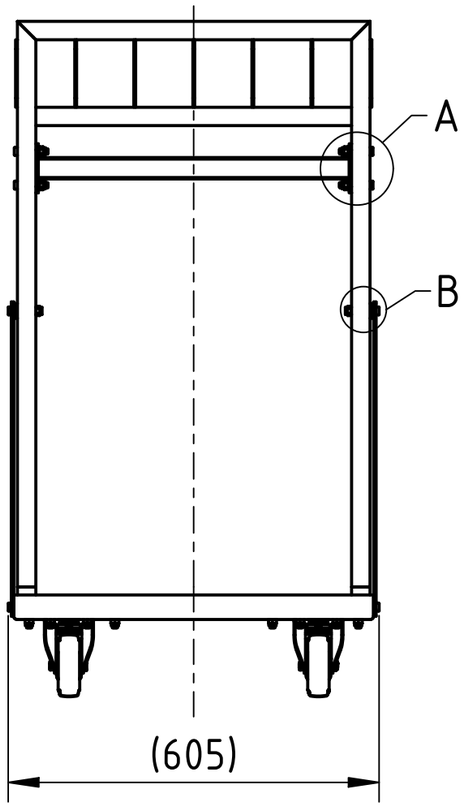

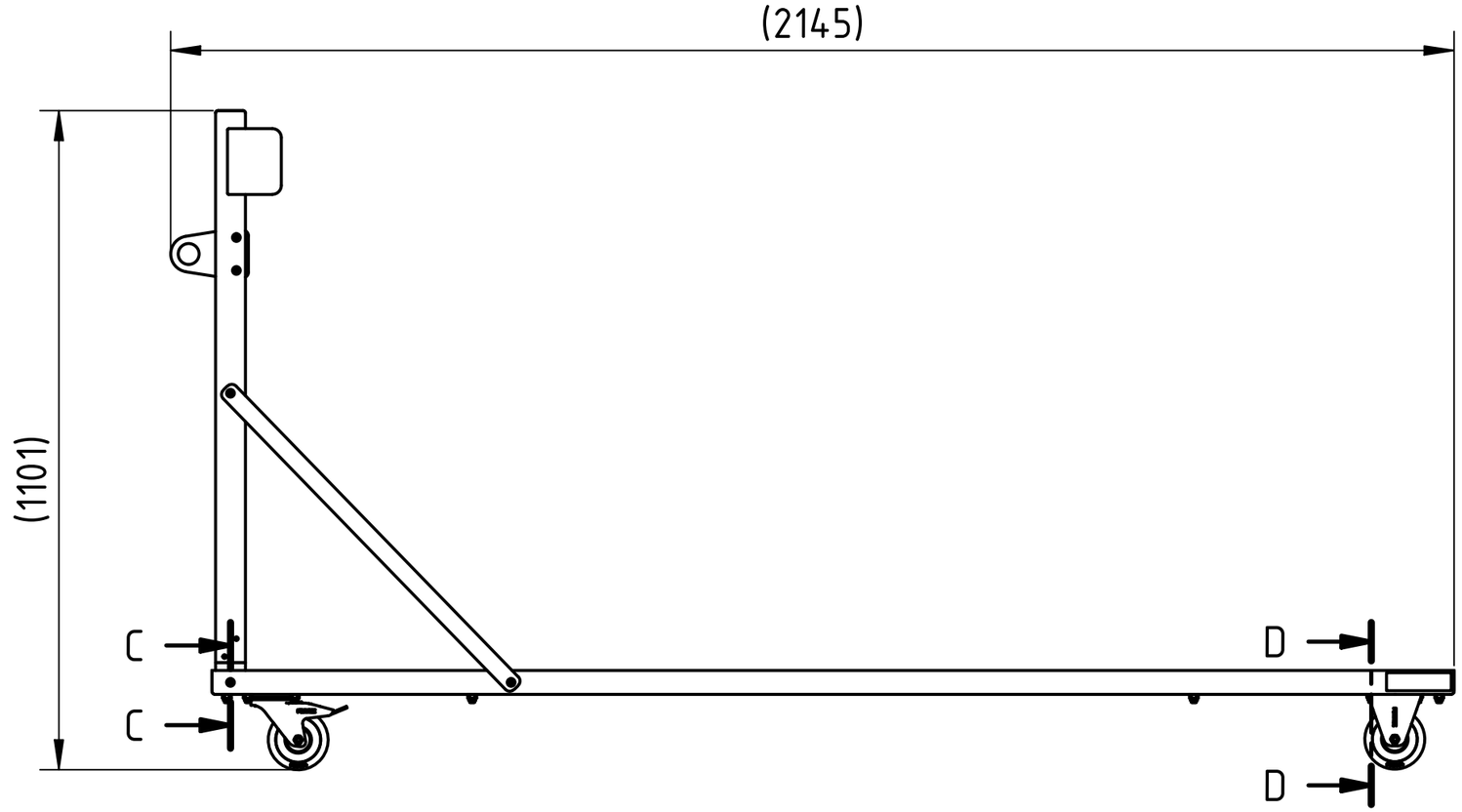

A (1 : 2)

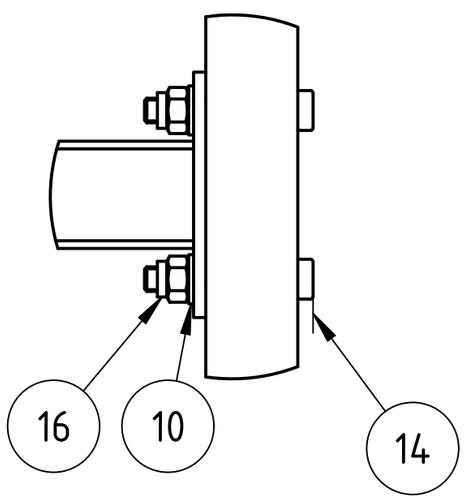

B (1 : 2)

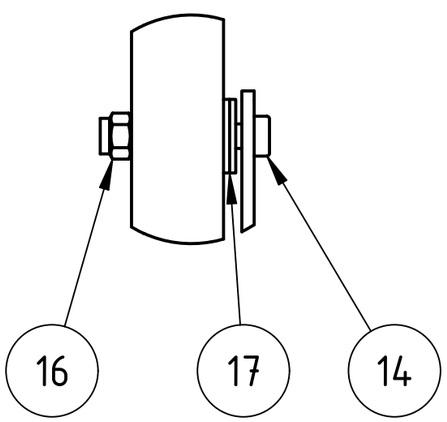

C-C (1 : 2)

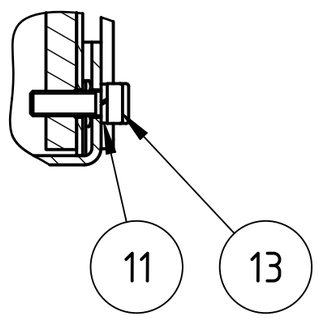

D-D (1 : 2)

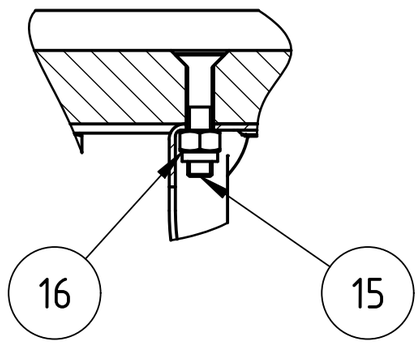

FORTEX

					Date	Name
				Drawn	25.08.2023	AZ
				Checked		
				Standard		
State	Changes	Date	Name	Scale: 1:1		

Part name:
FST-TROL-002 Dolly

1
A3

Weight: 32,525 kg