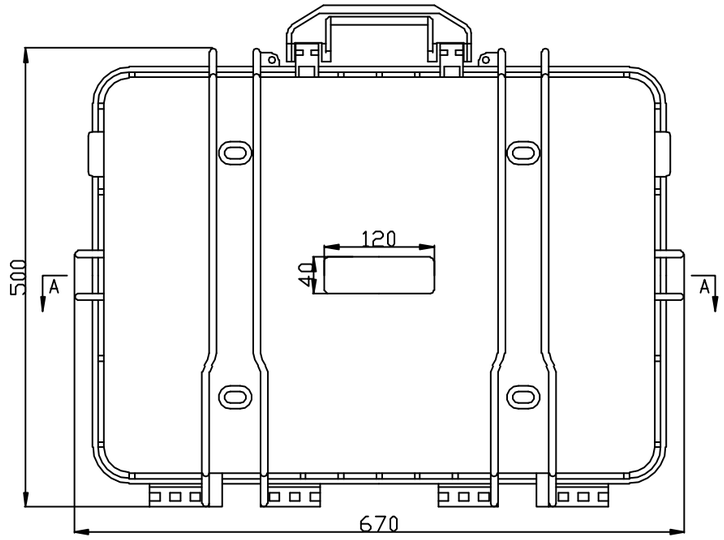

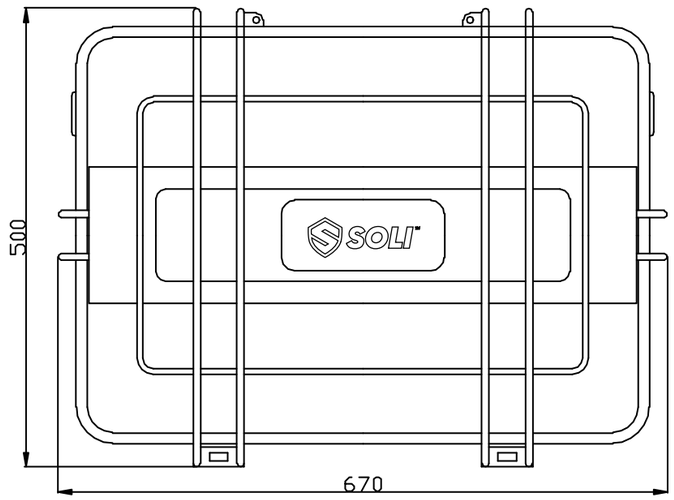

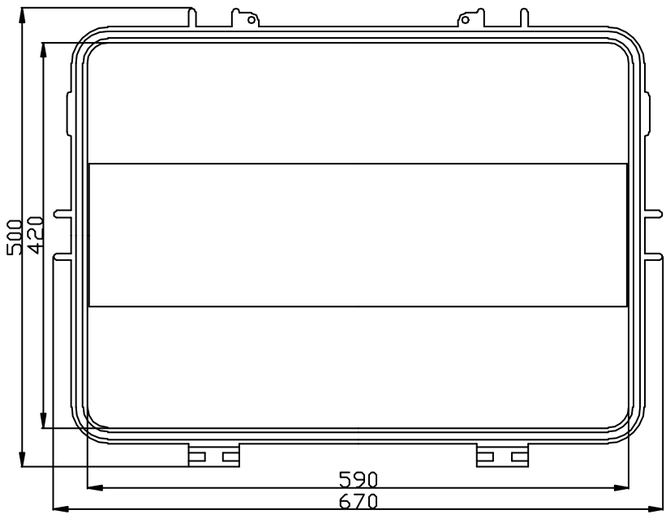

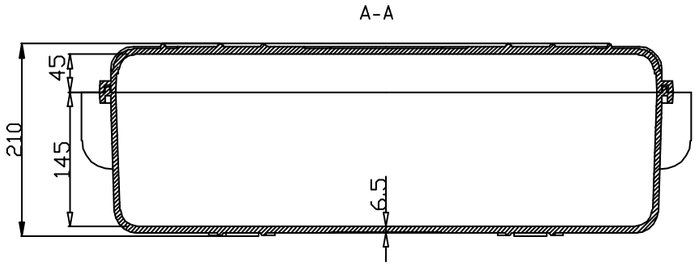

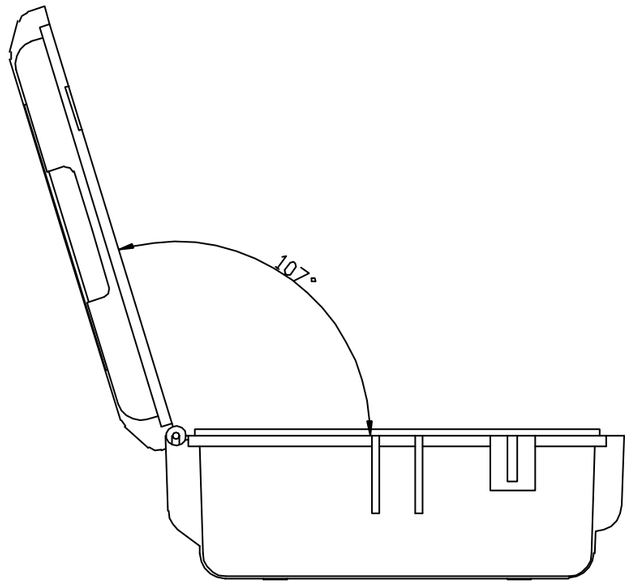

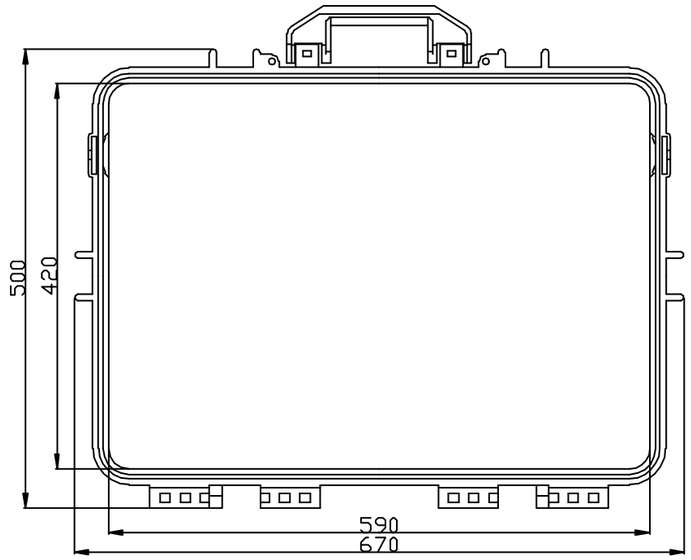

					Date	Name	Part name: SPC-2010
				Drawn	12.05.2026		
				Checked			
				Standard			
				Material: ABS / PP			1
							A3
State	Changes	Date	Name	Weight: 5,64kg			Scale: 1 : 1